Pipe Insulation with Polyurethane

BASF
The Chemical Company

Why using PU for pipe insulation?

BASF
The Chemical Company

- Best thermal resistance property
- Composite system as constructive element
- Simple installation
- Various application fields

Why using PU for pipe insulation?

BASF
The Chemical Company

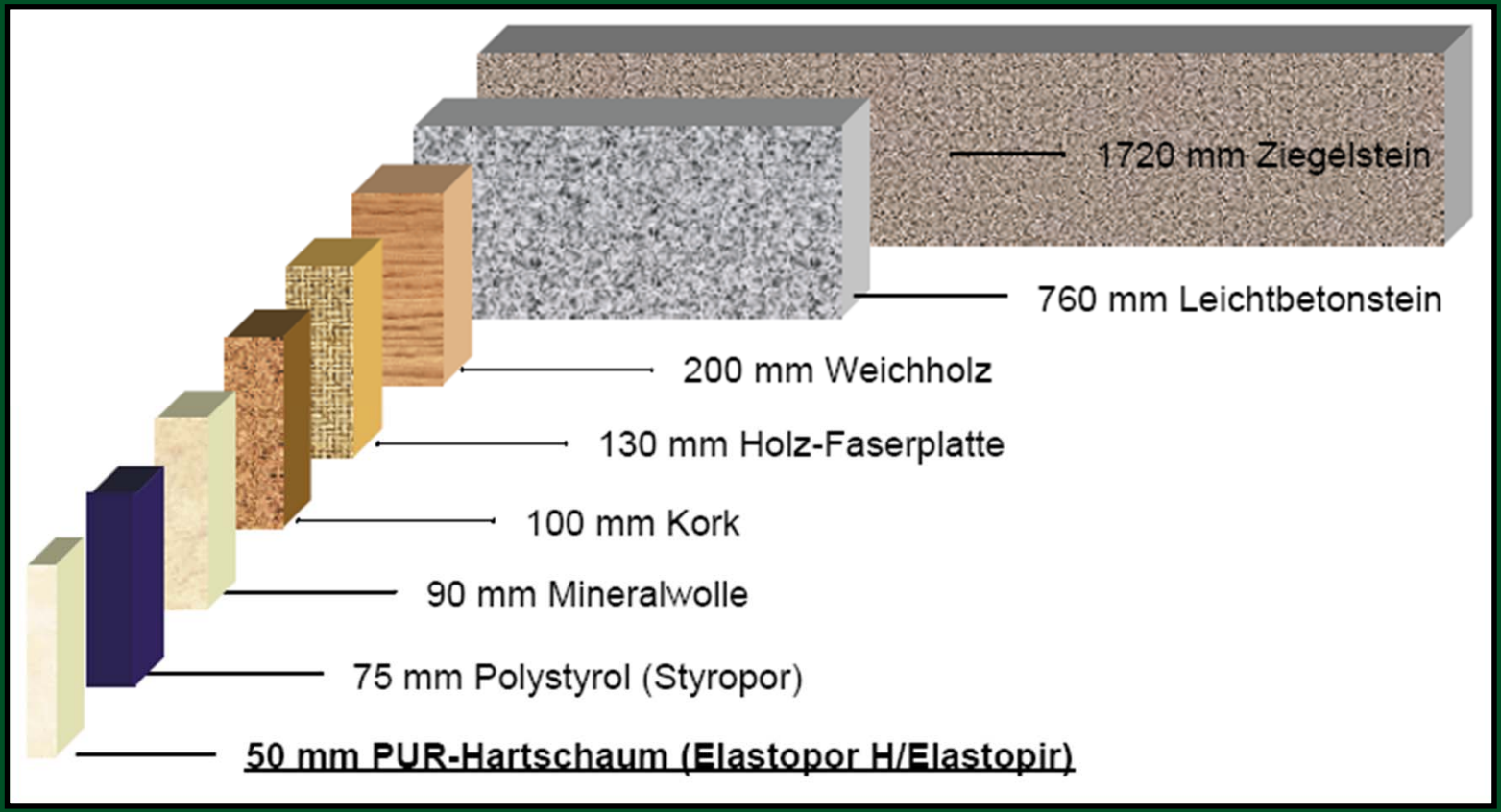

Application fields of PU for pipe insulation

BASF
The Chemical Company

District Heating / District Cooling

- Rigid pipe
- Fluid: Water
- Outer jacket: Polyethylene
- Carrier Pipe: Steel
- Temperature: 3 °C - 161 °C
- Rigid foam based on PUR
- Moulded density of foam: 60 - 80 kg/m³
- High requirements for the whole pipe system
- EN 253

Application fields of PU for pipe insulation

BASF
The Chemical Company

Application fields of PU for pipe insulation

BASF
The Chemical Company

District Heating / District Cooling

- Flexible pipe
- Fluid: Water
- Outer jacket: Polyethylene
- Carrier Pipe: Steel, copper, PEX
- Temperature: 3 °C - 150 °C
- Semi-flexible rigid foam based on PUR
- Moulded density: 55 - 70 kg/m³
- High requirements for the whole system

Application fields of PU for pipe insulation

BASF
The Chemical Company

Application fields of PU for pipe insulation

BASF
The Chemical Company

District heating / District Cooling

- Pipe joints
- Fluid: Water
- Outer jacket: Polyethylene
- Carrier Pipe: Steel
- Temperature: 3 °C - 161 °C
- Rigid foam based on PUR
- PU moulded density: 70 - 90 kg/m³
- EN 489

Application fields of PU for pipe insulation

BASF
The Chemical Company

Application fields of PU for pipe insulation

BASF
The Chemical Company

Industry pipe

- Rigid and flexible pipes
- Fluid: liquid chemicals / steam
- Outer jacket: Polyethylene, metal sheet
- Carrier Pipe: Steel
- Temperature: -162 °C - +180 °C
- Rigid foam based on PUR or PIR
- Moulded density: 60 - 120 kg/m³
- If necessary fire resistence according to DIN 4102, part 1 - B2 (Pipe: B1)

Application fields of PU for pipe insulation

BASF
The Chemical Company

Application fields of PU for pipe insulation

BASF
The Chemical Company

Joint Infill

- Offshore Gas Pipelines
- Concrete weight coated pipes
- Carrier Pipe: Steel
- Rigid foam based on opencell PUR
- Moulded density: 100 - 250 kg/m³
- Impact test: > 7 KJ
- Opencell content:> 80 %
- Water uptake: neutral buoyancy

Application fields of PU for pipe insulation

BASF
The Chemical Company

Application fields of PU for pipe insulation

BASF
The Chemical Company

Offshore

- Rigid and flexible pipes
- Fluid: Oil, gas
- Outer jacket: Steel, polyethylene, concrete
- Carrier Pipe: Steel
- Temperature: 3 °C - 120 °C
- Rigid foam based on PUR
- Open or closed cells
- Compact PUR (Solid-PU)
- Moulded density: 70 - 1150 kg/m³

Application fields of PU for pipe insulation

BASF
The Chemical Company

Production Methods

Discontinuous production (Pipe-in-Pipe / PiP)

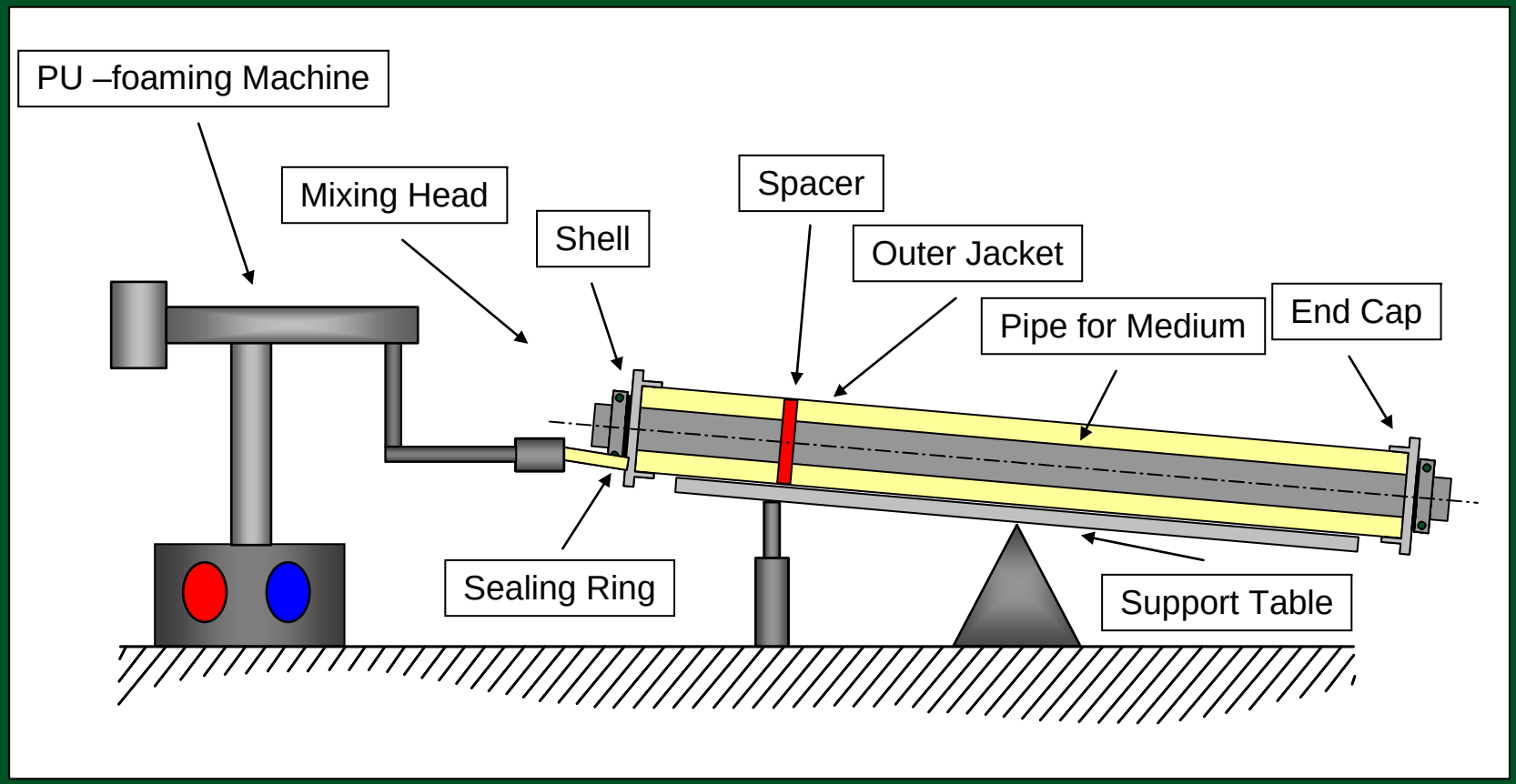

Production Methods

Discontinuous production (Pipe-in-Pipe / PiP)

BASF
The Chemical Company

Advantages

Simple Processing

- Flexible
- Cheap machinery equipment

Disadvantages

- High moulded density
- Slow PUR system required
- Relatively high thermal conductivity
- „Diffusion-tight“ foil impossible
- More manpower required

Production Methods

Continuous Production (Double Conveyer)

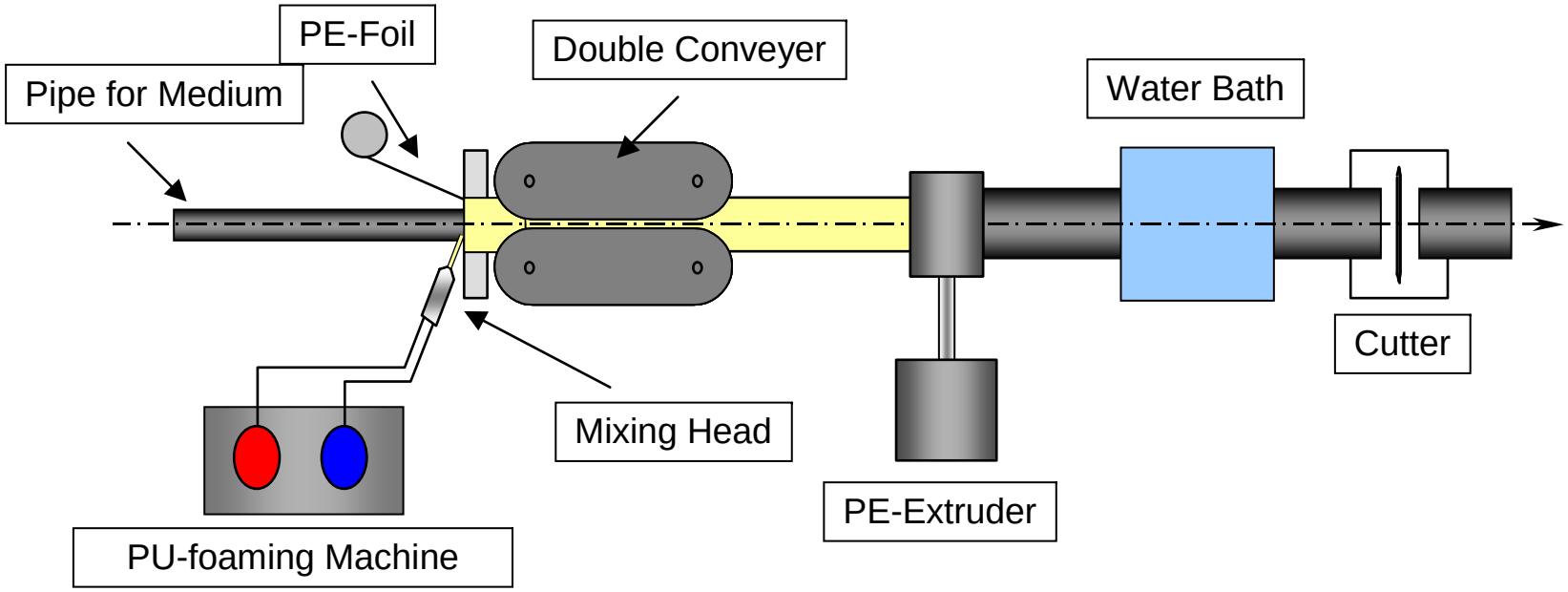

Production Methods

Continuous Production (Double Conveyer)

BASF
The Chemical Company

Advantages

- Low moulded density
- Low thermal conductivity
- „Diffusion-tight“ foil possible
- High productivity
- Less manpower required

Disadvantages

- Expensive machinery equipment
- Complicated process
- Less flexible

Properties of Insulated Pipes

BASF
The Chemical Company

EN 253

DEUTSCHE NORM Februar 2006

DIN EN 253

DIN

ICS 23.040.10

Ersatz für
DIN EN 253:2003-06

Fernwärmerohre –
Werkmäßig gedämmte Verbundmantelrohrsysteme für direkt erdverlegte Fernwärmenetze –
Verbund-Rohrsystem bestehend aus Stahl-Mediumrohr, Polyurethan-Wärmedämmung und Außenmantel aus Polyethylen;
Deutsche Fassung EN 253:2003 + A1:2005

Properties of Insulated Pipe

EN 253

BASF
The Chemical Company

- Core density: > 60 kg/m³
- Compressive strength: > 0,3 N/mm²
- Water absorption: < 10 Vol.-% after boiling test
- Axial shear strength: > 0,12 N/mm² (23 °C)
  > 0,08 N/mm² (140 °C)
- Tangential shear strength: > 0,20 N/mm² (23 °C)
- Calculated Continuous Operating Temperature

  over 30 years (CCOT) > 120°C

Properties of Insulated Pipe

EN 253 – Long-term Usage Temparature

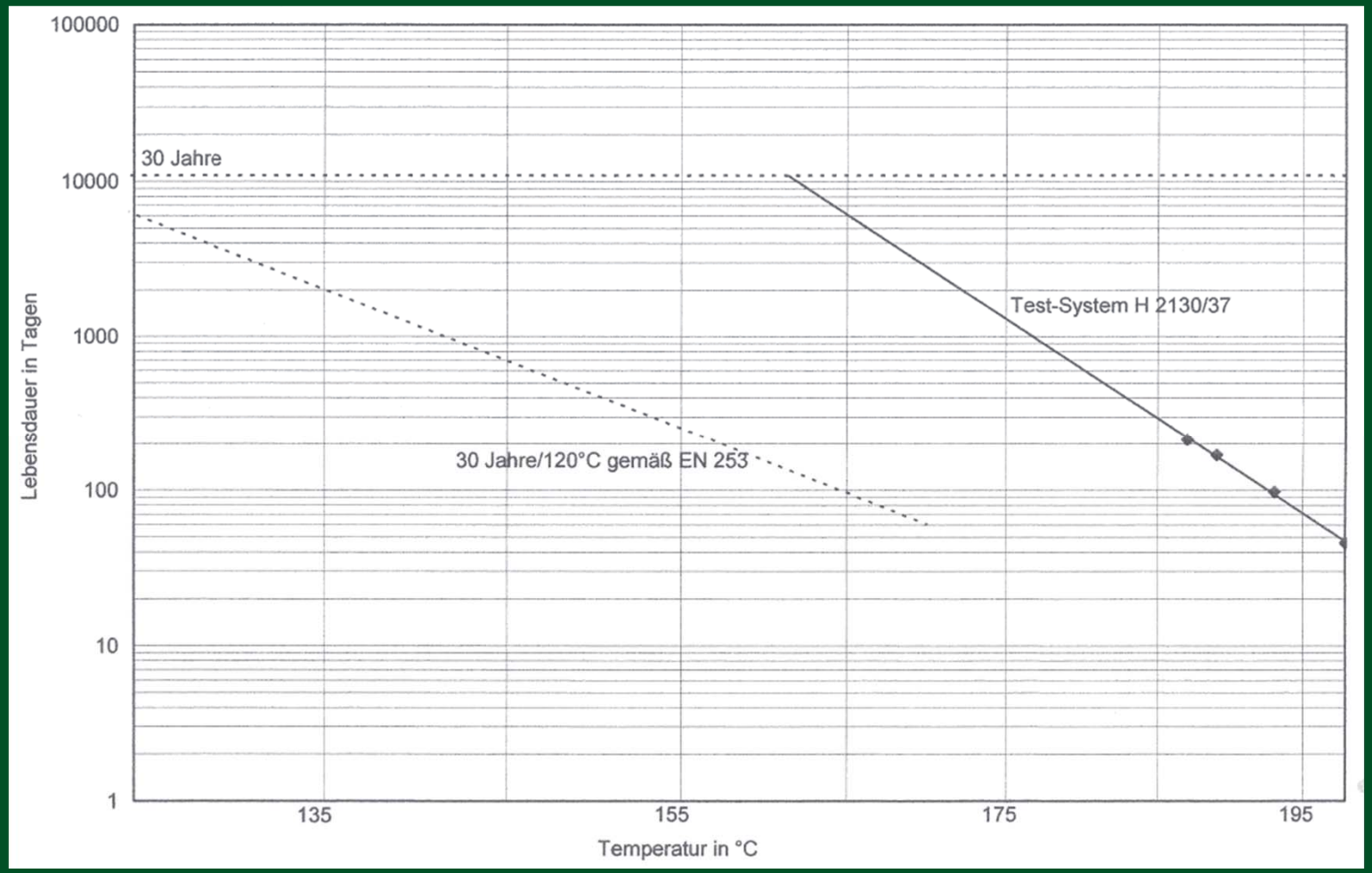

Future Work in Pipe Insulation

BASF
The Chemical Company

- Increased use of barrier sheets

  Target: Reduced aging of the pipe

- Consideration of the influence of oxidation for the thermal aging at the EN 253

  Target: Better determination of the CCOT

- Reducing the cell size by improved formulations and technologies

  Target: Reducing the the thermal conductivity

BASF
The Chemical Company

Thank you for your attention!